CONCRETE CANVAS®
Concrete on a Roll

1903.01.EN

MADE IN UK

CONCRETE CANVAS®

Concrete on a Roll

INSTALLATION GUIDE: SLOPE PROTECTION

RAIL | ROAD | MINING | PETROCHEM | AGRO | UTILITIES | PUBLIC WORKS | DEFENCE | DESIGN | SHELTER

Board of Trade Winner 2018

South Wales Chamber of Commerce — Connect. Effect. Grow.
Winner - 2017 Business of the Year
Success Through Innovation
Success Through Overseas Trade

THE LLOYDS BANK NATIONAL BUSINESS AWARDS UK 2017
Winner
Samsung Innovation Award

GROUND ENGINEERING AWARDS 2017
Winner
Technical Innovation Award

ice award winner 2017
ICE Wales Cymru Project Awards
Innovation Award
ICE Wales Cymru Awards 2017

THE SUNDAY TIMES FAST TRACK 100 2014
2014 Fast Track 100
16th fastest growing company in the UK.

2014 Queen's Award for Enterprise in Innovation

2013 Macrobert Award Finalist

www.titanenviro.com

CONCRETE CANVAS®

INSTALLATION GUIDE: SLOPE PROTECTION

1.0 Introduction

1.1 Background

Concrete Canvas® is part of a revolutionary new class of construction materials called Geosynthetic Cementitious Composite Mats (GCCMs).

It is a flexible, concrete impregnated fabric that hardens on hydration to form a thin, durable, water proof and fire resistant concrete layer.

Essentially, it can be described as 'concrete on a roll' and is used for a wide variety of applications including the rapid lining of drainage channels, providing slope protection, weed suppression, culvert repair and general concrete remediation.

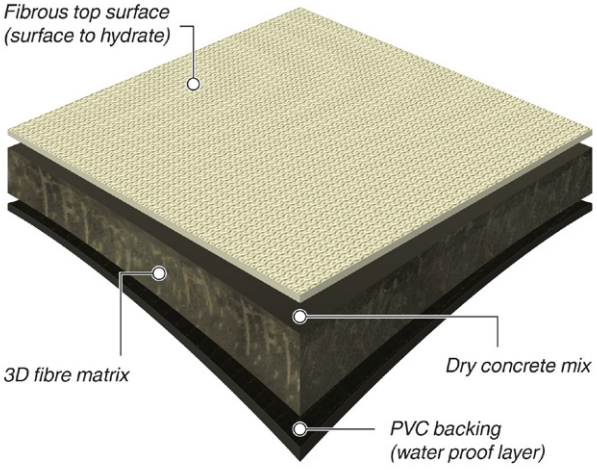

1.2 Scope

- This document provides guidance procedures for the installation of CC as **slope protection** in a manner that maximises safety, efficiency, and the physical integrity of the material and slope.
- This document provides useful information for installers, customers and specifiers of Concrete Canvas® GCCM (CC) and provides an overview of installation techniques for the protection of slopes.
- The versatile nature of CC means that this document is not exhaustive and is intended for guidance purposes only. Exceptions to this guideline may be required to address site-specific and/or product-specific conditions.
- The performance of the CC is wholly dependent on the quality of its installation. It is the installer's responsibility to adhere to these guidelines where applicable and to the project specification and drawings.
- This guide should be used together with the other relevant guides such as the *CC User Guide: Jointing & Fixing*.

CC Slope Protection, Oil Pumping Complex, Southern Russian Federation

2.0 Specification and Installation Essentials

2.1 Specifying the correct CC Thickness

CC is available in 3 thicknesses, CC5™ (5mm), CC8™ (8mm) and CC13™ (13mm).

- CC5™ is the standard thickness used for slope protection and is suitable for the majority of applications where surface water flow is from direct rainfall only.
- CC8™ should be considered for applications where the slope will be taking additional water run-off, for example on spillways and outfalls and the flow rate is below 8.6m/s.
- CC13™ should be considered where flow rates are above 8.6m/s or where the CC might be prone to impacts from debris or a high level of abrasion.

CC Type	Thickness (mm)	Roll Width (m)	Dry Weight (kg/sqm)	Batched Roll Coverage (sqm)	Batched Roll Length (m)	Bulk Roll Coverage (sqm)	Bulk Roll Length (m)
CC5™	5	1.0	7	10	10	200	200
CC8™	8	1.1	12	5	4.55	125	114
CC13™	13	1.1	19	N/A	N/A	80	73

2.2 Specifying the correct CC Roll Format

CC is available in **Bulk Rolls** or as smaller **Batched Rolls**.

- **Bulk Rolls** offer the quickest installation but must be deployed using heavy lifting equipment and a spreader beam. Bulk Rolls are generally more efficient to use than Batched Rolls, in terms of material use and transportation.
- For sites where this isn't suitable, man portable **Batched Rolls** can be installed without the need for plant and are well suited to smaller scale works in restricted access areas.
- CC is now also available in **Wide Rolls** of up to 4 times the standard roll width. Contact Concrete Canvas for further details.

CC Bulk Rolls and Batch Rolls

2.3 Which layup?

Standard practice is to lay CC vertically down the length of the slope as this provides the fastest method of installation and allows each roll to be securely fixed at the crest of the slope. If the slope is designed to act as a flood bund or is in contact with a watercourse, care should be taken to position the overlap in the direction of water flow (like shingled roof tiles). A horizontal layup can be practical for spillway or outfall applications. When designing any CC slope, the hydrostatic pressure and hydraulic loading should also be considered when specifying the layup, jointing method and intermediate anchoring.

Vertical layup

Horizontal layup

Concrete Canvas® GCCM can be used to provide a hard wearing erosion control surface for rapidly protecting slopes, outfalls, spillways and over- toppings. CC is typically used as an alternative to conventional concrete, such as shotcrete, and where vegetated slopes are unsuitable due to the high flow rates, arid climate or poor soil conditions.

Here are some key questions that you may need to consider before specifying or purchasing CC:

2.4 Is the application Slope Protection or Slope Stabilisation?

2.4.1 Slope Protection describes applications where the body of the slope is geotechnically stable but the surface of the slope is prone to erosion from weathering and potential shallow surface slip. Typically this might be on a sandstone rock face such as in the *CC Case Study: Alcobendas Tunnel Station*, or on slopes constructed from a mixture of rock and soil, where rainfall causes loss of fines which then risks destabilising the slope, such as in the *CC Case Study: Cundinamarca Slope*.

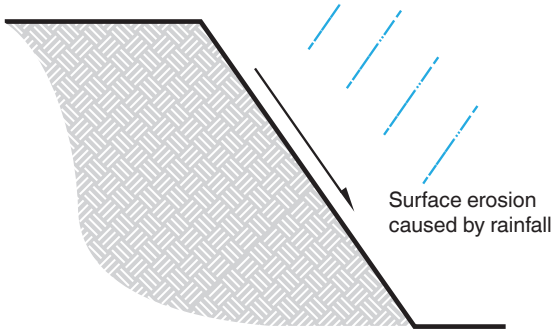

CC Slope Protection project, Alcobendas Tunnel Station, Spain

CC can be used as a non-structural facing to protect the slope against erosion, water penetration and weathering effects. In these applications, CC often replaces non-structural shotcrete. An advantage of CC is that it can be used in locations where sprayed concrete is unavailable or not easily mobilised, or where the use of shotcrete could affect or damage surrounding infrastructure.

2.4.2 Slope Stabilisation describes applications where the body of the slope is geotechnically unstable and is at risk of deep slip (a large mass of the slope collapsing). This may be caused by cutting low shear strength soils to unnatural slope face angles, saturation of the slope by water ingress, or external loading such as from trafficking or vibrations. In such conditions, the slope needs to be stabilised or reinforced. For soil/rock cuttings, stabilisation can be achieved using percussion anchors or soil nails (anchors). A slope can also be formed using Mechanically Stabilised Earth (MSE), incorporating geogrids which reinforce the soil enabling steep face slope construction. Both these stabilisation techniques require a close relationship with facing systems, which are necessary to prevent the slope from failure by transmitting load from the soil to the reinforcement. Conventional facing solutions include hard facings such as shotcrete, or flexible structural facings such as steel mesh (for soil/rock cuttings), or geosynthetics (for MSE structures).

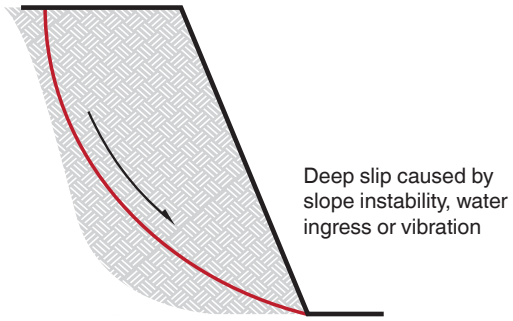

Slope Stabilisation project with CC beneath structural facing, Derby, UK

In the correct application, CC can be combined with flexible structural facings to replace shotcrete, such as when combining with a steel mesh and anchors for cuttings, or to protect a geosynthetic MSE structures, which can either be steep wrap faced, or shallow slopes with non-wrapped face constructions (see next section). In all such stabilisation applications, the CC acts as an erosion protection layer to a slope which is stabilised by the flexible structural facing and reinforcement. Slope stabilisation solutions must be designed by a Geotechnical Engineer. Concrete Canvas Ltd can provide CC material physical property data for the designers' calculations, please contact us for more details.

2.4.3 Protection of Geosynthetic Reinforced Structures using CC

Geosynthetics are commonly used to create soil retaining structures with steep face angles. The facings can vary from 'soft' vegetated solutions incorporating erosion blankets or geotextiles to 'hard' armoured facings such as sprayed concrete, asphalt or wire mesh. The unique physical properties of CC (such as flexural strength, puncture resistance, UV and weed suppression) enable the material to be used as an alternative to armoured facings on geosynthetic reinforced structures. Applications include:

- Remediation of existing structures where vegetation growth on 'soft' facings has not established, causing degradation of facing geosynthetics and deterioration of the reinforced soil. CC will protect the facing from further UV damage and significant water ingress.
- Protection of geosynthetic wrap faces structures from external damage which could compromise reinforcement integrity. The concrete matrix of CC will prevent animals from burrowing and stop vandals from cutting/tearing reinforcing geosynthetics.
- In the design of new geosynthetic reinforced structures as an alternative to conventional armoured facing solutions, the flexural properties of CC enables the material to accommodate settlements often associated with reinforced soil construction. Sprayed concrete can crack under settlement, increasing the likelihood of serviceability issues.

Remediation of Reinforced Soil Slope with insufficient vegetation growth

Protection of Mechanically Stabilised Earth wall to prevent animal damage

New Reinforced Soil Slope designed with CC armoured facing

Protection of reinforced soil slope to prevent vandalism

As with all slope protection applications, CC can also be incorporated into the crest and toe drainage to prevent saturation of slope and softening/erosion of foundations soils which could lead to instability. For more information on the use of CC for drainage applications, please see the *CC Installation Guide: Channel Lining.*

2.5 Which fixing method?

CC should be securely fixed and anchored at the crest of the slope. The anchorage is essential in order to prevent water flow below the material which may undermine the CC. The anchorage must be designed by a geotechnical engineer to provide sufficient restraint to prevent the CC layer from pull out by forces such as self weight, wind uplift or water flow, etc. Additional fixings should be used down the face for profiling or additional support as required.

The following provides examples of suitable fixings for different substrates. For full details of jointing and fixing methods please see the *CC User Guide: Jointing & Fixing.*

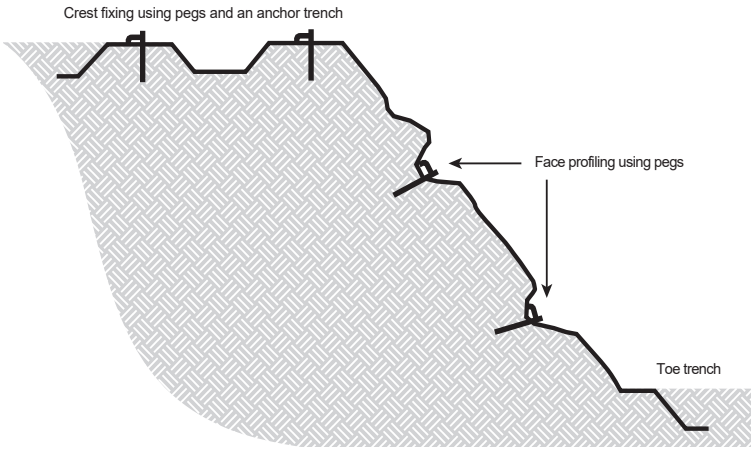

To Soil: CC can be fixed to a soil substrate using pegs, an anchor trench, soil nails or percussion anchors. The most common method of securing CC at the crest is using a combination of pegs and an anchor trench. Peg length and spacing should be determined based on the pull-out force requirement, however typical spacing is at every joint along the crest. It is essential to prevent water ingress between the CC and the substrate at the crest as this can lead to undermining. An effective means of sealing this top edge is by burying the exposed CC in an anchor trench backfilled with concrete or site fill material. An anchor trench also provides a neat aesthetic transition to the surrounding landscape.

CC fixed at the crest of a slope with ground pegs and anchor trench

Concrete anchor trench constructed over CC at the crest of a slope

To Concrete: CC can be fixed to a concrete substrate (such as a headwall) using conventional masonry fixings such as self tapping masonry bolts, wedge anchors and "Hilti" type nails. We recommend a fixing with a minimum shank diameter of 3mm and minimum washer/head diameter of 16mm or a clamping bar to prevent pull-through.

CC fixed at crest of slope with concrete anchor bolts

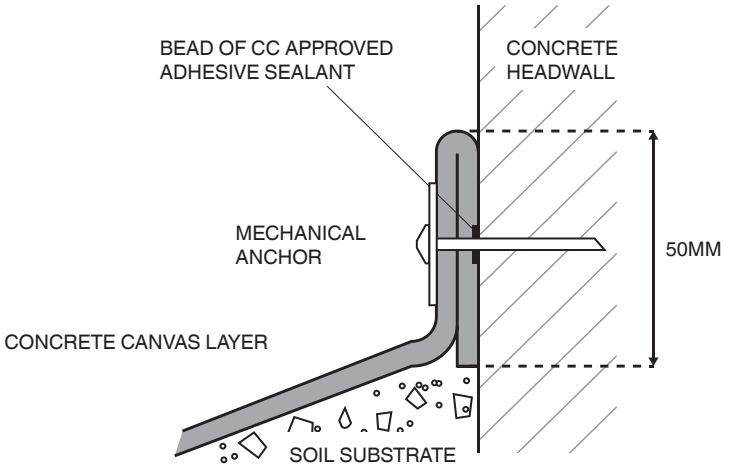

Diagram of typical fixing to concrete headwall using Hilti nail

To Rock: CC can be secured onto rocky substrates using rock bolts; the number and type of fixings should be selected based on the pull-out force requirement. A suitable head design should be selected to prevent stress concentrations. A minimum head diameter of 15mm is normally recommended and plates up to 150mm are often used. Large anchor plates should be circular where possible or have radiused corners to avoid stress concentrations.

Rock bolt and large anchor plate - select radiused corners where possible

CC fixed to slope using rock bolt

2.6 Which jointing method?

A suitable jointing method should be selected based on the loading and water impermeability requirements of the project. The standard method of jointing for slope protection is to use a screwed joint which provides a good mechanical bond and sufficient impermeability for most slope protection applications. We recommend using stainless steel screws inserted at 200mm centres along the overlap. The screws should be positioned between 30-50mm from the edge of the joint and applied prior to hydration or immediately afterward. The concrete within CC will then set around the thread of the screws. When positioning subsequent CC layers, ensure that there is at least a 100mm overlap between layers and that all overlaps are in the direction of water flow. Please see the *CC User Guide: Jointing & Fixing* for more jointing methods.

Jointing adjacent layers of CC using stainless steel screws

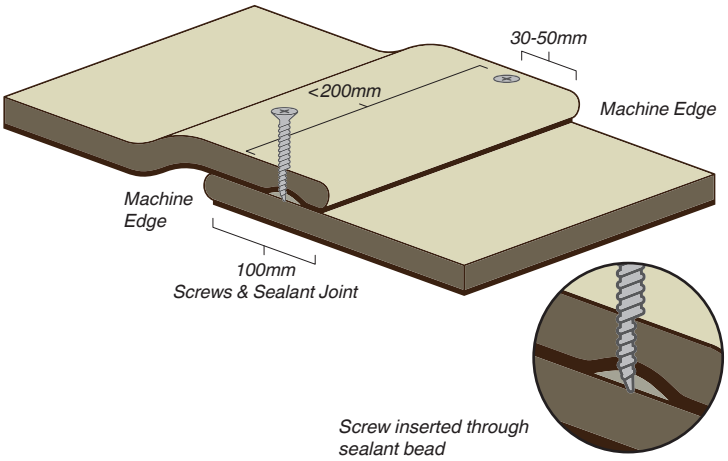

Diagram showing screw inserted through sealant bead

If a higher level of impermeability is required (for example on an outfall) then a bead of sealant can be applied in the overlap prior to screwing. Suitable approved sealants are available from Concrete Canvas Ltd. If screws are not suitable (for example due to a concrete substrate under the CC) then a thermally bonded joint may be used. For containment critical applications, CC Hydro™ should be used.

3.0 Installation Principles

The unique material properties of Concrete Canvas (CC) mean that it can be used for a variety of applications. Following the Four Installation Principles below will help ensure a successful installation.

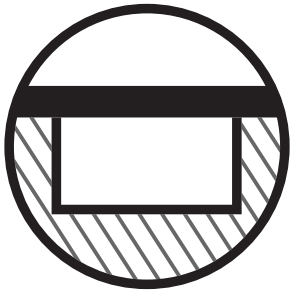

Avoid Voids

1. Avoid Voids

Prepare the substrate so it is well compacted, geotechnically stable and has a smooth and uniform surface.

- For soil substrates, remove any vegetation, sharp or protruding rocks and fill any large void spaces. Ensure the CC makes direct contact with the substrate to minimise soil bridging or potential soil migration under the layer.
- For concrete substrates, remove any loose or friable material, cut away any protruding exposed re-bar and fill any large cracks or voids.

Secure Canvas

2. Secure Canvas

It is important to ensure that the CC is **Jointed** at every overlap between layers and that those layers are **Fixed** to the substrate.

- **Jointing:** Overlapped CC layers should be securely jointed together, typically this is achieved using stainless steel screws applied with an auto-fed screw gun at regular intervals. Correct screw placement will help ensure intimate contact between CC layers, prevent washout of the substrate, and limit potential weed growth. An adhesive sealant can be applied between the layers to improve the joint impermeability.

  A non-penetrative method of jointing is to 'thermally bond' the CC layers together. This also improves joint impermeability. For more jointing options see above.
- **Fixing:** When fixing to a soil substrate, ground pegs (eg J-pegs) are typically used. On rock or concrete substrates, CC layers can be jointed together and fixed to the substrate using masonry bolts, percussion anchors or shot fired masonry nails. Stainless steel fixings with washers are recommended.

Prevent Ingress

3. Prevent Ingress

It is important to prevent water or wind ingress between the CC and the substrate, both around the perimeter of the installation and along the joints.

- For soil substrates, this is typically achieved by capturing the entire perimeter edge of the CC within an anchor trench.
- On rocky or concrete substrates, the perimeter edge should be sealed with a concrete fillet or an adhesive sealant.
- All overlapped CC layers should be lapped in the direction of water flow.

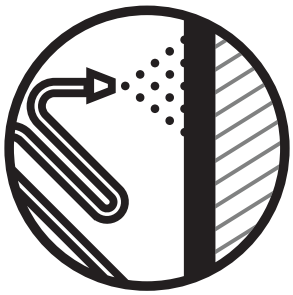

Fully Hydrate

4. Hydrate Fully

It is critical to properly hydrate CC, taking into account the quantity of material used and ambient temperature conditions.

- Always ensure hydration through the fibrous top surface.
- Ensure to hydrate any overlapped areas and anchor trenched material prior to backfilling.
- Spray the fibre surface with water until it feels wet to touch for several minutes after hydration (the 'Thumb Test').
- Follow the *CC User Guide: Hydration*.

4.0 Installation Methodology

4.1 Equipment Required

- Sufficient CC to complete project
- Safety mask and gloves
- Cutting equipment, snap off knife or disc cutter
- Metal or plastic fixing pins as required in the design
- Lump Hammer
- Screwdriver and stainless screws or alternative method to join the CC layers as specified in the design
- Water supply

See *CC Equipment List* for full details. Dust hazard. Wear appropriate PPE. Consult *CC SDS* document.

4.2 Ground Preparation

CC will conform closely to the underlying surface contours of the slope. For slopes with a high degree of surface undulation it is recommended to grade the slope if possible, to reduce voids from forming between CC and the substrate. Where it is not possible to grade the slope, voids can be reduced by profiling with suitable fixings. For the best results it is also recommended that loose soil, vegetation, soft ground and protruding rocks are removed.

4.3 Fixing and Laying CC

The fastest and easiest method of laying CC is using bulk rolls hung from a spreader beam. If access for heavy lift plant equipment is limited, batched rolls may be used. The procedure for laying bulk and batched rolls is the same.

When laying the CC ensure that the fibrous surface of the CC is facing upwards and the PVC membrane is in contact with the ground. For vertical layup the CC should first be secured at the crest of the slope, using one of the methods described above, and then unrolled down the length of the slope.

4.4 Positioning and Profiling CC

When positioning subsequent CC sections, ensure that there is at least a 100mm overlap between layers and that all overlaps are in the direction of water flow. CC may need to be fixed down the face of the slope for profiling or to provide additional support. It is preferable to locate fixings along the overlaps where possible, hydrating under the overlap first.

4.5 Hydrating CC

Once positioned, CC should be hydrated by spraying with water. Spray the fibre surface with water until it feels wet to touch for several minutes after spraying. An excess of water should be used as CC cannot be over hydrated (minimum ratio of water: CC is 1:2 by weight). Re-spray the CC again after 1 hour if installing CC5™, installing on steep slopes or installing in warm or windy climates where drying conditions can occur. It is important to ensure that overlapped and anchor trenched sections are hydrated.

Refer to the *CC User Guide: Hydration*, for instructions on the correct hydration procedure. Please note that you should not rely on rainfall to hydrate the material.

4.6 Jointing CC

The fastest and easiest method of jointing is using stainless steel screws at 200mm spacing. These can be applied using an auto-fed collated screw driver. If a screwed joint is not appropriate, for example where a higher level of impermeability is required, joint permeability can be reduced by combining with an adhesive sealant or by thermal bonding.

Please refer to the *CC User Guide: Jointing & Fixing*.

4.7 Setting

Once hydrated, CC remains workable for approximately 1-2 hours in a UK climate. In warm climates, working time may be reduced. CC will harden to 80% of its 28 day strength in 24 hours and is ready for use.

4.8 Maintenance

In the right conditions, CC will naturally 'green' over time with moss and blend in with the environment. The surface can also be painted with a suitable masonry paint if required.